KHYC 2014 Spinnaker Series

KHYC 2013 Spinnaker Series
Race # 1 'Stoney Special'
Saturday February 8, 2014
Rev 01/22/14 corrected course

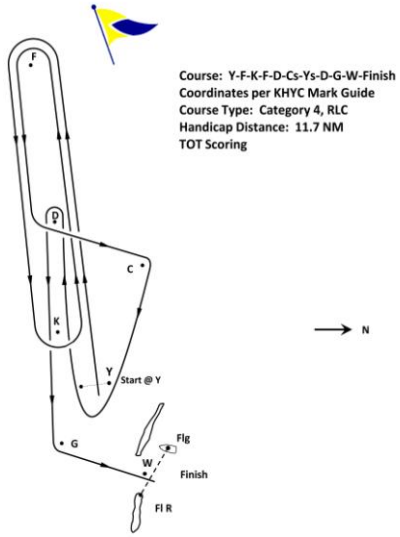

Course: Y-F-K-F-D-Cs-Ys-D-G-W-Finish
Coordinates per KHYC Mark Guide
Course Type: Category 4, RLC
Handicap Distance: 11.7 NM
TOT Scoring

KHYC 2012 Spinnaker Series
Race # 2 'Trans Harbor'
Saturday March 22, 2014
An ASMBYC High Point Race

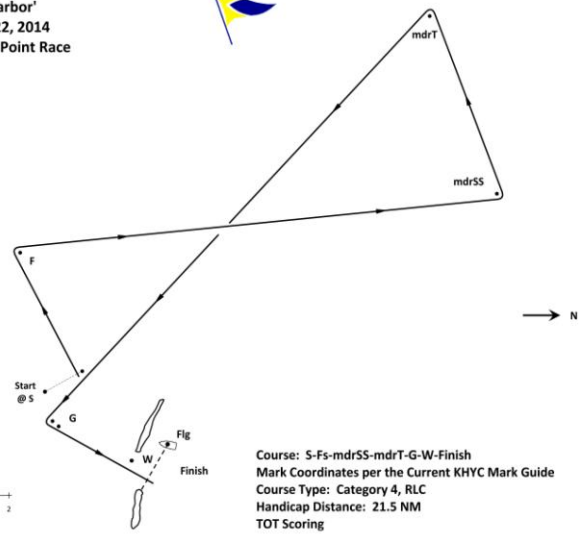

Course: S-Fs-mdrSS-mdrT-G-W-Finish
Mark Coordinates per the Current KHYC Mark Guide
Course Type: Category 4, RLC
Handicap Distance: 21.5 NM
TOT Scoring

KHYC 2013 Spinnaker Series
Race # 3 'Malibu & Return'
Saturday May 17, 2014
An ASMBYC High Point Race

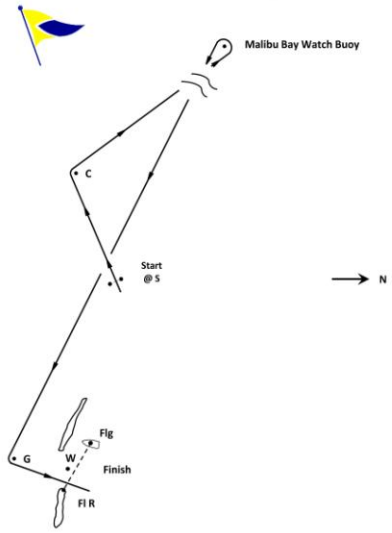

Course: S-Cs-Malibu-G-W-Finish
Mark Coordinates per KHYC Mark Guide
Course Type: Category 3, RLC
Handicap Distance: 35.5 NM
TOT Scoring

KHYC 2014 Spinnaker Series
Race # 4 'KHYC - CBYC'
Category 4, OWC Ratings
Saturday June 21, 2014
An ASMBYC High Point Race
First Race of the Quantum
'Around the Point' Series

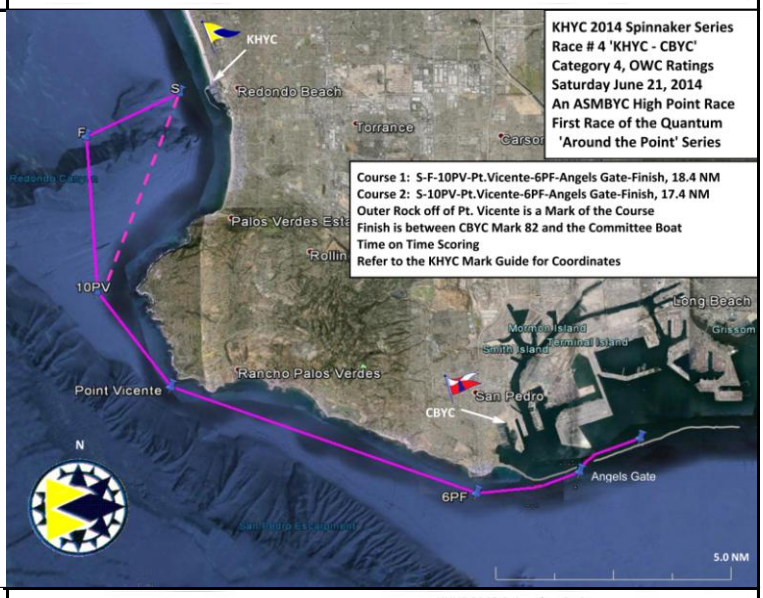

Course 1: S-F-10PV-Pt.Vicente-6PF-Angels Gate-Finish, 18.4 NM
Course 2: S-10PV-Pt.Vicente-6PF-Angels Gate-Finish, 17.4 NM
Outer Rock off of Pt. Vicente is a Mark of the Course
Finish is between CBYC Mark 82 and the Committee Boat
Time on Time Scoring
Refer to the KHYC Mark Guide for Coordinates

KHYC 2013 Spinnaker Series
Race # 5 'Matt Walsh'
Saturday August 9, 2014

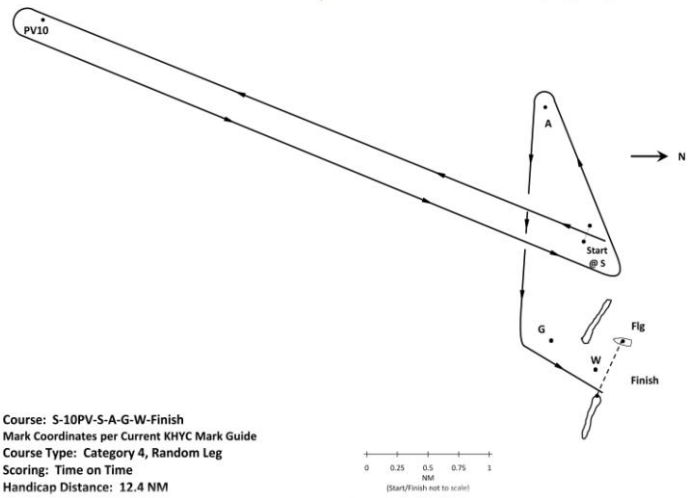

Course: S-10PV-S-A-G-W-Finish
Mark Coordinates per Current KHYC Mark Guide
Course Type: Category 4, Random Leg
Scoring: Time on Time
Handicap Distance: 12.4 NM

KHYC 2013 Spinnaker Series
Race #6 'Windward Leeward' Race
Category 4, Buoy Races, TOT Scoring
Mark Coordinates per Current KHYC Mark Guide
Saturday September 28, 2013
An ASMBYC High Point Race

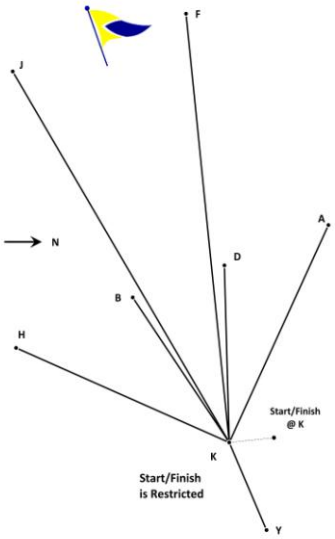

Course Options

#	Course	NM	Initial Mag BRG
1	Start@K - D - Y - Finish@K	2.4	256°
2	Start@K - B - Y - Finish@K	2.4	223°
3	Start@K - H - T - Finish@K	4.1	191°
4	Start@K - A - K - A - Finish@K	4.2	282°
5	Start@K - F - D - F - Y - Finish@K	6.8	251°
6	Start@K - J - Y - Finish@K	4.6	226°
7	Start@K - J - B - J - Finish@K	6	226°
8	Start@K - J - B - J - Y - Finish@K	6.9	226°
9	Start@K - F - Y - Finish@K	4.6	251°
10	Start@K - B - Y - B - Finish@K	3.8	223°
11	Start@K - J - Finish@K	3.8	226°
12	Start@K - F - Finish@K	3.7	251°
13	Start@K - D - Y - D - Finish@K	3.9	256°
14	Start@K - Y - B - Finish@K	2.4	054°
15	Start@K - Y - F - Finish@K	4.6	054°

0 0.25 0.5 0.75 1
NM
(Start/Finish not to scale)